NJR5-D
Series Soft Starter

1. Product overview

NJR5-D series soft starter is an external bypass type soft starter. Its input power supply voltage (main circuit voltage) is divided into AC220V, AC380V, AC460V, AC575V and AC690V. It features strong load adaptability and stable and reliable operation, and is widely used in motor drive equipment in fields such as metallurgy, petroleum, fire protection, mining, water supply, municipal services, food, cement, petrochemicals, etc. It is the most ideal replacement product for traditional star-delta starting and autotransformer voltage reduction starting.

NJR5-D series soft starters are three-phase AC asynchronous motor soft starters designed based on power electronic technology, microprocessor technology and modern control theory technology. They achieve functions such as soft start and soft stop of the motor by controlling the three-phase parallel-connected thyristors connected in series between the power supply and the controlled motor. This product can effectively control the starting current and starting torque of the motor.

Standards: IEC60947-4-2

2. Type designation

N	JR	5	-	□	/	□	□
Enterprise characteristic code	AC soft starter	Design SN		Rated current: (A)		Type	Main circuit voltage
				15~1600A		D: External bypass soft starter	2: AC220V 3: AC380V 4: AC460V 5: AC575V 6 : AC690V

3. Environmental conditions

3.1 Operation temperature:-10° C~+40° C, +40° C~+50° C should be derated for use, and the current will be derated by 2% for every 1° C increase.

3.2 Storage temperature:-25° C~+70° C.

3.3 Relative humidity: no more than 95% (20° C~65° C).

3.4 Altitude:
If it exceeds 1000m, it should be used with corresponding derating.
If it is above 1000m and less than 3000m, the current should be derated by 0.5% for each 100m increase. If it is above 3000m, it needs to be customized.

3.5 Water and dust proof:
No condensation, no flammable, explosive gas, no conductive dust.

3.6 Shock and vibration:
Do not drop the soft starter to the ground or suffer sudden impact, and do not install the soft starter where it may vibrate frequently.

3.7 Ventilation requirements:
When the soft starter is installed in the cabinet, it is required to install an exhaust fan on the cabinet to make the cabinet ventilated smoothly.

3.8 Long-term storage:
When the soft starter is stored for a long time, it should be energized once within two years, and then run after 1 hour.

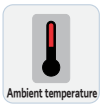

4. Technical parameters and performance

4.1 Power supply voltage:
1) NJR5- □ / D2: AC220V (range: AC198V~AC264V);
2) NJR5- □ /D3: AC380V (range: AC323V~AC437V) ;
3) NJR5- □ /D4: AC460V (range: AC414V~AC504V) ;
4) NJR5- □ /D5: AC575V (range: AC517V~AC633V);
5) NJR5- □ /D6: AC690V (range: AC621V~AC759V).

4.2 Main power frequency: 50HZ ± 1.5Hz, 60Hz ± 1.8Hz.

4.3 Applicable motor: common squirrel-cage three-phase asynchronous motor

4.4 Pollution level: Level 3

4.5 Rated insulation voltage:
1) NJR5- □ /D2 and NJR5- □ /D3: AC660V;
2) NJR5- □ /D4, NR5-D/D5, NJR5- □ /D6: AC1000V.

4.6 Rated impulse withstand voltage: 8kV.

4.7 Cooling method: natural cooling.

4.8 Starting frequency: The starting frequency can be set in per hour, and it should be not to exceed 10 times per hour. For the heavier load, starting frequency should be set less.

4.9 Soft start time: (2~60) S.

4.10 Soft stop time: (2~60) S.

4.11 Starting modes: normal current mode, enhanced current mode, normal voltage mode, enhanced voltage mode, linear torque mode, square torque mode and frequency division mode, a total of 7 types.

4.12 Stop mode: free stop, brake stop and voltage ramp soft stop, a total of 3 types.

4.13 Initial voltage: (30~70)% Ue , where Ue represents the power supply voltage.

4.14 Jump time: (0.0~2.0) S.

4.15 Jump voltage: (50~100)% Ue , where Ue represents the power supply voltage.

4.16 Current limiting multiple: (50~500)% Ie, where Ie represents the rated current of the motor.

4.17 Torque limit level: (50.0~300.0)% Te , where Te represents the rated torque of the motor.

5. Main features

5.1 Performance aspects

- 7 starting modes: normal current mode, enhanced current mode, normal voltage mode, enhanced voltage mode, linear torque mode, square torque mode and frequency division mode, select different starting modes and starting parameter settings according to load characteristics, It can maximize the motor to achieve the best starting effect.
- Stable kick start: When switching from the kick process to the normal start mode, the current is seamlessly and smoothly connected without sudden changes, which prolongs the life of the transmission equipment.
- Equipped with torque control mode: real-time control of the output electromagnetic torque of the soft starter, so that the speed of the motor rises more smoothly during the soft start process.
- With light-load energy-saving function: when the energy-saving mode is selected, when the motor is detected to be in a light- load running state, the output voltage of the soft starter will be appropriately reduced, the motor magnetic flux will drop, the excitation current will drop, the iron loss will decrease, the stator current will decrease, and the stator copper loss will decrease. Decrease - the output power of the soft starter decreases, thereby realizing energy saving.
- Possess low-speed forward rotation and reverse rotation functions: By adjusting the trigger angle of the thyristor, the product has the switching function of low-speed forward rotation and low-speed reverse rotation, which meets some application functions, such as water pump cleaning.
- With brake stop function: by injecting direct current into the motor, it can realize fast stop and meet some occasions that require fast braking.
- Wide power supply frequency: In current mode, the power supply frequency ranges from 35Hz to 60Hz, which is more suitable for generator power supply occasions.

5.2 Functional aspects

- With secondary current limiting function: in some heavy load occasions, when the motor cannot start after the primary current limiting is adopted, the secondary current limiting can be selected (the secondary current limiting multiple is larger than the primary current limiting multiple) to start the motor, and finally the motor reaches run at full speed.
- With the function of the 2nd and 3rd motor parameters: when starting 2-3 motors in sequence, through the logic input control of the external control terminal signal IN1IN2, if the 2nd and 3rd motor parameters are selected, start and stop according to the 2nd and 3rd motor parameters And running overload protection, especially suitable for one-to-two, one-to-three applications and the application of two-speed motors.
- With a variety of protections: input phase loss, output phase loss, three- phase unbalance, operating overload, starting current limit overtime, main circuit overvoltage, main circuit undervoltage, load stall/short circuit, excessive starting time, starting times Too many faults, \etc., effectively protect the soft starter and the motor it carries.
- It has 4 kinds of analog current output: 4mA~20mA, 0mA, 20mA, 2mA~10mA and 0mA~10mA, which are better compatible with industrial automation equipment or instrumentation equipment.
- Built-in 485 communication interface: standard Modbus protocol is adopted to realize the communication between the soft starter and the upper computer.

5.3 User aspects

- User-friendly debugging: After selecting the load type (as shown in F200 or F300 or F400), the startup parameters related to the motor will be automatically configured, making it convenient for users to debug.
- Highly operable: Utilizing liquid crystal display, the interface is user-friendly and the operation is convenient.
- Record 10 pieces of fault information: Record the working status, product temperature, working current and working voltage at the moment of the fault occurrence, which is helpful for the troubleshooting, analysis and resolution of the faults.
- Contains function parameter modification records: Through the FE group, users can quickly view the modifications made to the function parameters, which is convenient for after-sales service support.

5.4 Stability aspects

- Coating the PCBA with anti-corrosion paint has significantly enhanced the stability of the product.
- Enhanced EMC design, resistant to higher EMS interference, with high stability.

6. Selection table

Model	Rated Voltage	Rated Current	Rated Power
NJR5-15/D2	AC220V	15A	4kw
NJR5-22/D2	AC220V	22A	5.5kw
NJR5-30/D2	AC220V	29A	7.5kw
NJR5-37/D2	AC220V	36A	11kw
NJR5-44/D2	AC220V	42A	11kw
NJR5-60/D2	AC220V	57A	15kw
NJR5-74/D2	AC220V	70A	18.5kw
NJR5-90/D2	AC220V	84A	22kW
NJR5-110/D2	AC220V	103A	30kw
NJR5-150/D2	AC220V	140A	37kW
NJR5-180/D2	AC220V	167A	45kw
NJR5-220/D2	AC220V	207A	55kw
NJR5-264/D2	AC220V	248A	75kw
NJR5-320/D2	AC220V	300A	90kw
NJR5-370/D2	AC220V	349A	110kw
NJR5-440/D2	AC220V	404A	110kw
NJR5-500/D2	AC220V	459A	132kw
NJR5-560/D2	AC220V	514A	160kw
NJR5-630/D2	AC220V	579A	160kw
NJR5-710/D2	AC220V	634A	200kw
NJR5-800/D2	AC220V	720A	200kw
NJR5-900/D2	AC220V	810A	250kw
NJR5-1000/D2	AC220V	900A	250kw
NJR5-1120/D2	AC220V	1050A	280kw
NJR5-1260/D2	AC220V	1140A	315kw
NJR5-1420/D2	AC220V	1250A	355kw
NJR5-1600/D2	AC220V	1460A	400kw

Model	Rated Voltage	Rated Current	Rated Power
NJR5-15/D3	AC380V	15A	7.5kw
NJR5-22/D3	AC380V	22A	11kw
NJR5-30/D3	AC380V	29A	15kw
NJR5-37/D3	AC380V	36A	18.5kw
NJR5-44/D3	AC380V	42A	22kw
NJR5-60/D3	AC380V	57A	30kw
NJR5-74/D3	AC380V	70A	37kw
NJR5-90/D3	AC380V	84A	45kw
NJR5-110/D3	AC380V	103A	55kw
NJR5-150/D3	AC380V	140A	75kw
NJR5-180/D3	AC380V	167A	90kw
NJR5-220/D3	AC380V	207A	110kw
NJR5-264/D3	AC380V	248A	132kw
NJR5-320/D3	AC380V	300A	160kw
NJR5-370/D3	AC380V	349A	185kw
NJR5-440/D3	AC380V	404A	220kw
NJR5-500/D3	AC380V	459A	250kw
NJR5-560/D3	AC380V	514A	280kw
NJR5-630/D3	AC380V	579A	315kw
NJR5-710/D3	AC380V	634A	355kw
NJR5-800/D3	AC380V	720A	400kw
NJR5-900/D3	AC380V	810A	450kw
NJR5-1000/D3	AC380V	900A	500kw
NJR5-1120/D3	AC380V	1050A	560kw
NJR5-1260/D3	AC380V	1140A	630kw
NJR5-1420/D3	AC380V	1250A	710kw
NJR5-1600/D3	AC380V	1460A	800kw

Model	Rated Voltage	Rated Current	Rated Power
NJR5-15/D4	AC460V	15A	9kw
NJR5-22/D4	AC460V	22A	15kw
NJR5-30/D4	AC460V	29A	18.5kw
NJR5-37/D4	AC460V	36A	22kw
NJR5-44/D4	AC460V	42A	30kw
NJR5-60/D4	AC460V	57A	37kw
NJR5-74/D4	AC460V	70A	45kw
NJR5-90/D4	AC460V	84A	55kw
NJR5-110/D4	AC460V	103A	75kw
NJR5-150/D4	AC460V	140A	90kw
NJR5-180/D4	AC460V	167A	110kw
NJR5-220/D4	AC460V	207A	132kw
NJR5-264/D4	AC460V	248A	150kw
NJR5-320/D4	AC460V	300A	185kw
NJR5-370/D4	AC460V	349A	220kw
NJR5-440/D4	AC460V	404A	250kw
NJR5-500/D4	AC460V	459A	280kw
NJR5-560/D4	AC460V	514A	315kw
NJR5-630/D4	AC460V	579A	355kw
NJR5-710/D4	AC460V	634A	400kw
NJR5-800/D4	AC460V	720A	450kw
NJR5-900/D4	AC460V	810A	560kw
NJR5-1000/D4	AC460V	900A	560kw
NJR5-1120/D4	AC460V	1050A	630kw
NJR5-1260/D4	AC460V	1140A	710kw
NJR5-1420/D4	AC460V	1250A	800kw
NJR5-1600/D4	AC460V	1460A	900kw

Model	Rated Voltage	Rated Current	Rated Power
NJR5-15/D5	AC575V	15A	11kW
NJR5-22/D5	AC575V	22A	18.5kw
NJR5-30/D5	AC575V	29A	22kw
NJR5-37/D5	AC575V	36A	30kw
NJR5-44/D5	AC575V	42A	30kw
NJR5-60/D5	AC575V	57A	45kw
NJR5-74/D5	AC575V	70A	55kw
NJR5-90/D5	AC575V	84A	75kw
NJR5-110/D5	AC575V	103A	90kw
NJR5-150/D5	AC575V	140A	110kw
NJR5-180/D5	AC575V	167A	132kw
NJR5-220/D5	AC575V	207A	160kw
NJR5-264/D5	AC575V	248A	185kw
NJR5-320/D5	AC575V	300A	250kw
NJR5-370/D5	AC575V	349A	280kw
NJR5-440/D5	AC575V	404A	315kw
NJR5-500/D5	AC575V	459A	355kw
NJR5-560/D5	AC575V	514A	400kw
NJR5-630/D5	AC575V	579A	450kw
NJR5-710/D5	AC575V	634A	500kw
NJR5-800/D5	AC575V	720A	560kw
NJR5-900/D5	AC575V	810A	630kw
NJR5-1000/D5	AC575V	900A	800kw
NJR5-1120/D5	AC575V	1050A	800kw
NJR5-1260/D5	AC575V	1140A	900kw
NJR5-1420/D5	AC575V	1250A	1000kw
NJR5-1600/D5	AC575V	1460A	1200kw

Model	Rated Voltage	Rated Current	Rated Power
NJR5-15/D6	AC690V	15A	11kw
NJR5-22/D6	AC690V	22A	18.5kw
NJR5-30/D6	AC690V	29A	22kw
NJR5-37/D6	AC690V	36A	30kw
NJR5-44/D6	AC690V	42A	37kw
NJR5-60/D6	AC690V	57A	55kw
NJR5-74/D6	AC690V	70A	75kw
NJR5-90/D6	AC690V	84A	90kw
NJR5-110/D6	AC690V	103A	110kw
NJR5-150/D6	AC690V	140A	132kw
NJR5-180/D6	AC690V	167A	160kw
NJR5-220/D6	AC690V	207A	200kw
NJR5-264/D6	AC690V	248A	250kw
NJR5-320/D6	AC690V	300A	315kw
NJR5-370/D6	AC690V	349A	355kw
NJR5-440/D6	AC690V	404A	400kw
NJR5-500/D6	AC690V	459A	400kw
NJR5-560/D6	AC690V	514A	500kw
NJR5-630/D6	AC690V	579A	560kw
NJR5-710/D6	AC690V	634A	630kw
NJR5-800/D6	AC690V	720A	710kw
NJR5-900/D6	AC690V	810A	800kw
NJR5-1000/D6	AC690V	900A	900kw
NJR5-1120/D6	AC690V	1050A	900kw
NJR5-1260/D6	AC690V	1140A	1000kw
NJR5-1420/D6	AC690V	1250A	1200kw
NJR5-1600/D6	AC690V	1460A	1400kw

7. Basic Wiring Diagram

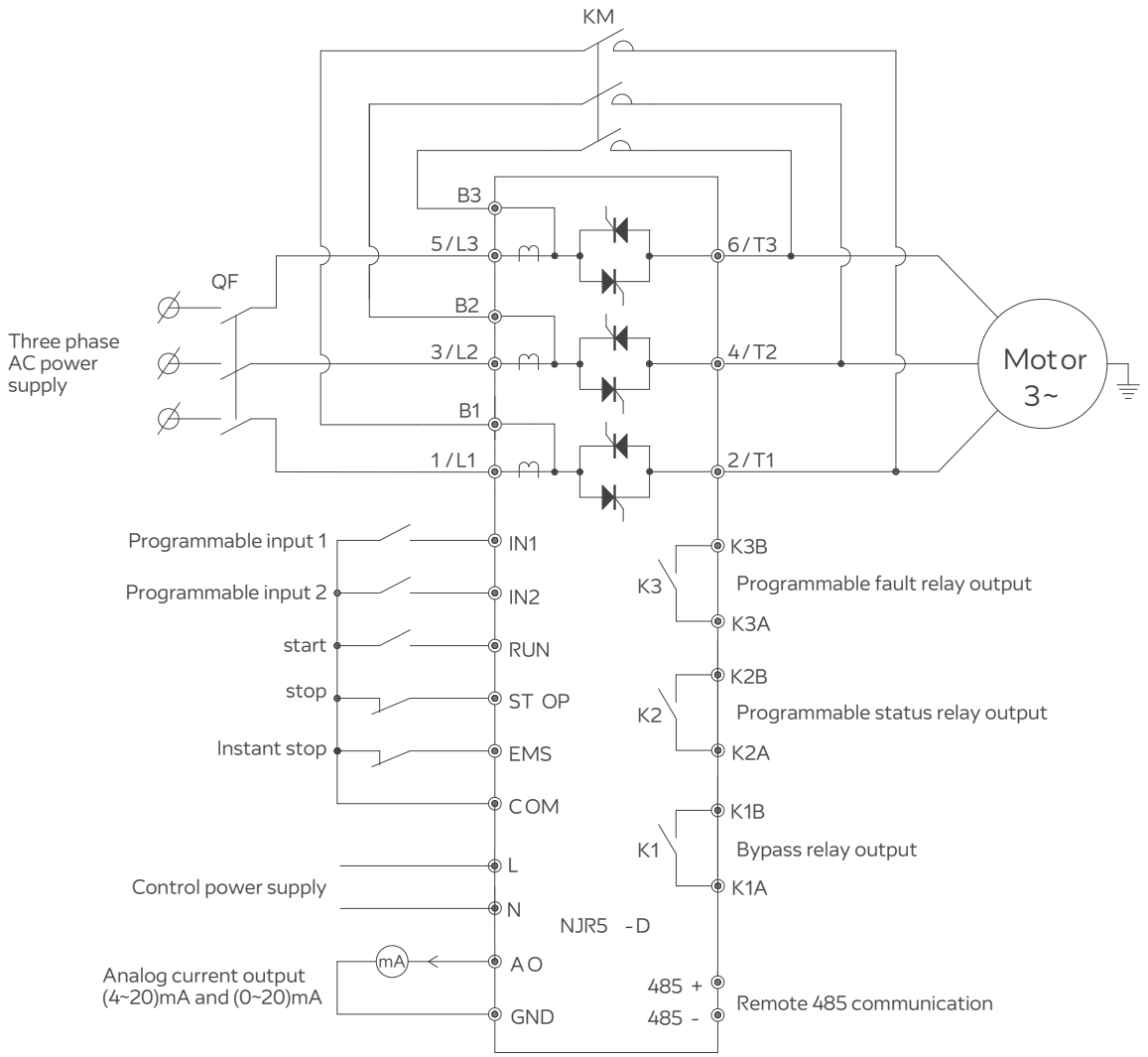

Note 1: For NJR5- □ /D2 and NJR5- □ /D3 products, there is no need to connect external control power supply terminals L and N, as control power is directly supplied internally from the main power supply; for NJR5- □ /D4, NJR5- □ /D5, and NJR5- □ /D6 products, the control power supply terminals L and N must be connected, as the control power needs to be supplied separately from an external source.
Note 2: Under default function parameter conditions, when external control terminals are used to control starting and stopping, with the STOP terminal and COM terminal closed, after power-up, a start command will only be issued when the RUN terminal and COM terminal transition from open to closed. If upon power-up the RUN, STOP, and COM terminals are always closed, no start command will be received.
Note 3: The circuit breaker QF must be installed and located inside the cabinet. The rated current of the circuit breaker is recommended to be 1.2 times the rated current of the soft starter model.
Note 4: By modifying the setting value of function parameter F500 about relay output valid state, you can confirm whether K2 and K3 relays are valid in closed state or in open state. See F500 parameter introduction for details.

8. Terminal definition

8.1 Definition of main circuit terminals

1/L1、3/L2、5/L3	This is the input terminal of the soft starter, and also the input terminal of the three-phase AC power supply
2/T1、4/T2、6/T3	This is the output terminal of the soft starter, and also the input terminal of the three-phase asynchronous motor
B1、B2、B3	This connects to the bypass device, and also serves as the input terminal of the bypass device

8.2 Definition of external control terminals

Terminal Name	Terminal Definition	Detailed Description
L	Control power input terminal L	Input voltage is AC220V (-10%~+15%), Only NJR5- □ /D4, NJR5- □ /D5, and NJR5- □ /D6 products have L and N control power supply terminals; NJR5- □ /D2 and NJR5- □ /D3 do not have these terminals.
N	Control power input terminal N	
K1A、K1B	Bypass relay K1 (normally open)	Contact capacity: 5A/250VAC When the soft starter switches to bypass operation, the K1A and K1B terminals become closed. **Note: If the coil current of the controlled device exceeds 5A, be sure to add an intermediate relay.**
K2A、K2B	Programmable status relay K2 (normally open)	Contact capacity: 3A/250VAC This function is determined by function parameters F500 and F513.When the tens digit of F500 is 0, the state is valid when terminals K2A and K2B are closed; when it is 1, the state is valid when terminals K2A and K2B are open. **Example:** When the tens digit of F500 is set to 0 and F513 is set to 2 (Bypass State), terminals K2A and K2B will be closed when the soft starter enters bypass operation, and open in all other operating states; when the tens digit of F500 is set to 1 and F513 is set to 2 (Bypass State), K2A and K2B will be open in bypass operation and closed in any other operating state. **Note: If the coil current of the controlled device exceeds 3A, be sure to add an intermediate relay.**
K3A、K3B	Programmable fault relay K3 (normally open)	Contact capacity: 3A/250VAC This function is determined by function parameters F500 and F514. When the ones digit of F500 is 0, the state is valid when terminals K3A and K3B are closed; when it is 1, the state is valid when terminals K3A and K3B are open. **Example:** When the ones digit of F500 is set to 0 and F514 is set to 0 (Any fault),the K3A and K3B terminals will be closed when the soft starter has any fault, and open in the event of no fault; when the ones digit of F500 is set to 1 and F514 is set to 0 (Any fault or), the K2A and K2B terminals will be pen when the soft starter has any fault, and K3A and K3B will remain closed if there is no fault. **Note: If the coil current of the controlled device exceeds 3A, be sure to add an intermediate relay.**
IN1	Programmable input terminal IN1	Referenced to COM; function determined by parameter F501. **Note:This terminal is a dry contact;it is strictly forbidden to introduce external AC or DC power sources.**
IN2	Programmable input terminal IN2	Referenced to COM; function determined by parameter F502. **Note:This terminal is a dry contact;it is strictly forbidden to introduce external AC or DC power sources.**
RUN	Start terminal RUN	Referenced to COM. When external control starting is allowed, if RUN,STOP,and COM terminals are all closed for a time longer than the values set in F507 and F509,a start command will be issued;when the STOP terminal opens for longer than the value set in F510,a stop command will be issued. **Note:This terminal is a dry contact;it is strictly forbidden to introduce external AC or DC power sources.**
STOP	Stop terminal STOP	
EMS	Emergency stop terminal EMS	Referenced to COM.When EMS terminal and COM terminal are open for longer than the value set in parameter F512, "Emergency stop terminal open circuit" fault is reported. **Note:This terminal is a dry contact;it is strictly forbidden to ntroduce external AC or DC power sources.**
COM	External control common terminal COM	This is the common terminal for RUN,STOP,IN1, IN2,and EMS signal input.
AO	Analog output terminal AO	Referenced to GND. The output type of the analog output AO is determined by parameter F600,and the output function of the analog output AO is determined by F601.For details,refer to the descriptions of function parameters F600, F601,and F602.
GND	GND of internal chip operation	The operating ground of the main chip of the product,which is also the ground for the analog output AO,and at the same time serves as the ground for RS485 communication.
485+	RS485 communication terminal 485+	485+ connects to the positive differential terminal of the host computer.
485-	RS485 communication terminal485-	485- connects to the negative differential terminal of the host computer.

9. Appearance,mounting dimensions,and weight

9.1 Soft start erappearance and mounting dimensions

Figure 9.1 NJR5-15/D2~NJR5-60/D2, NJR5-15/D3~NJR5-60/D3, NJR5-15/D4~NJR5-60/D4,NJR5-15/D5~NJR5-60/D, NJR5-15/D6~NJR5-60/D6 overall appearance and installation dimensions diagram

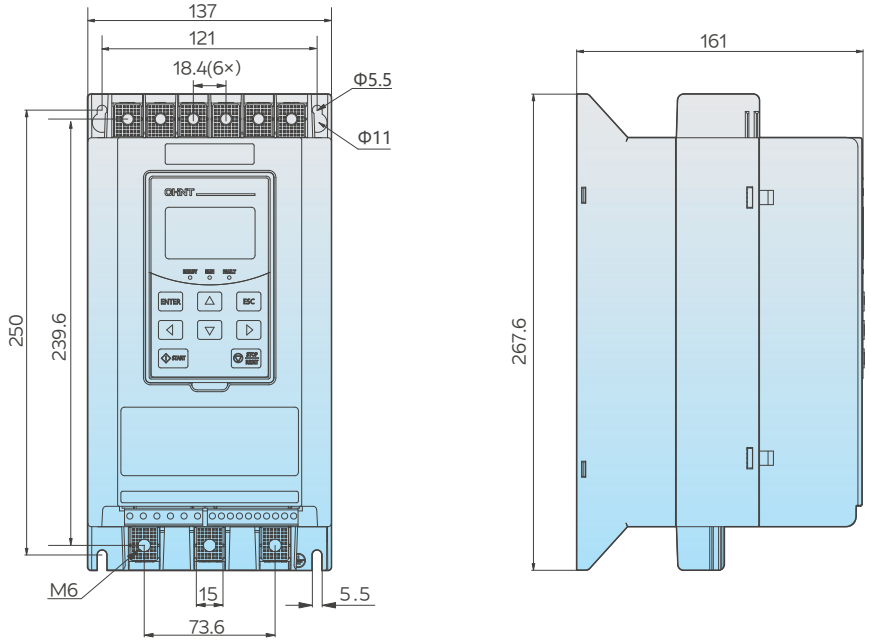

Figure 9.2 NJR5-74/D2~NJR5-110/D2, NJR5-74/D3~NJR5-110/D3, NJR5-74/D4~NJR5-110/D4, NJR5-74/D5~NJR5-110/D, NJR5-74/D6~NJR5-110/D6 overall appearance and installation dimensions diagram

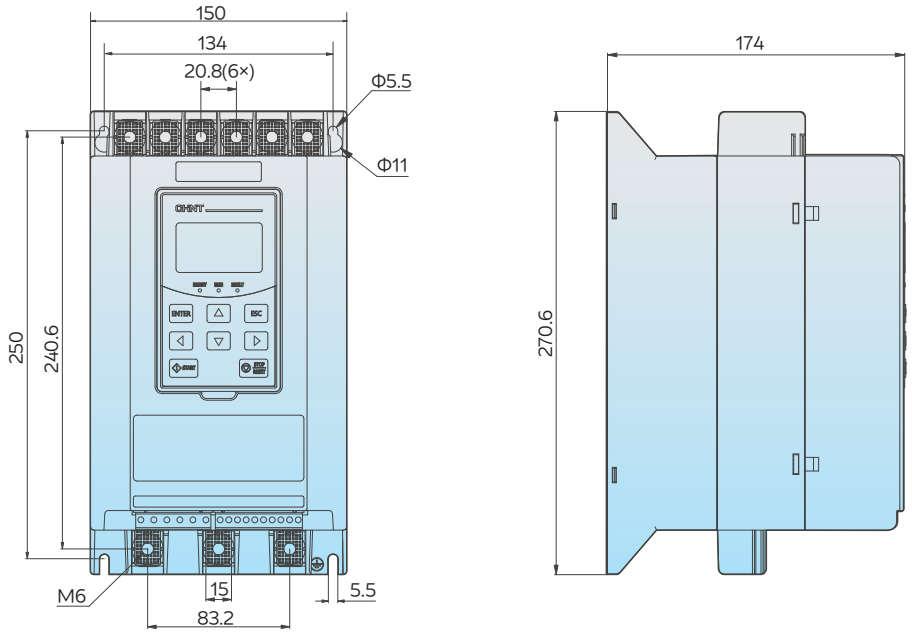

Figure 9.3 NJR5-150/D2~NJR5-180/D2, NJR5-150/D3~NJR5-180/D3, NJR5-150/D4~NJR5-180/D4, NJR5-150/D5~NJR5-180/D, NJR5-150/D6~NJR5-180/D6 overall appearance and installation dimensions diagram

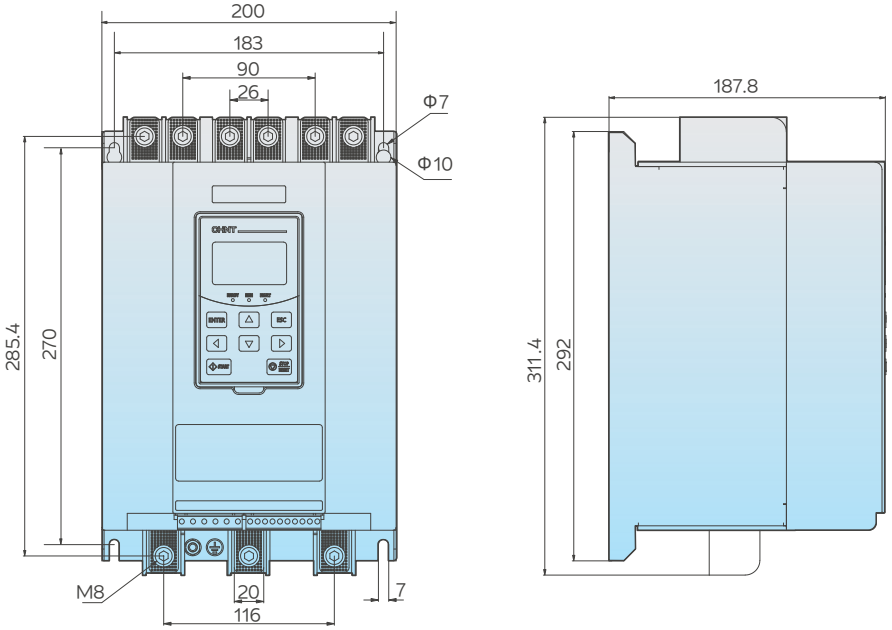

Figure 9.4 NJR5-220/D2~NJR5-440/D2, NJR5-220/D3~NJR5-440/D3, NJR5-220/D4~NJR5-440/D4,NJR5-220/D5~NJR5-440/D, NJR5-220/D6~NJR5-440/D6 overall appearance and installation dimensions diagram

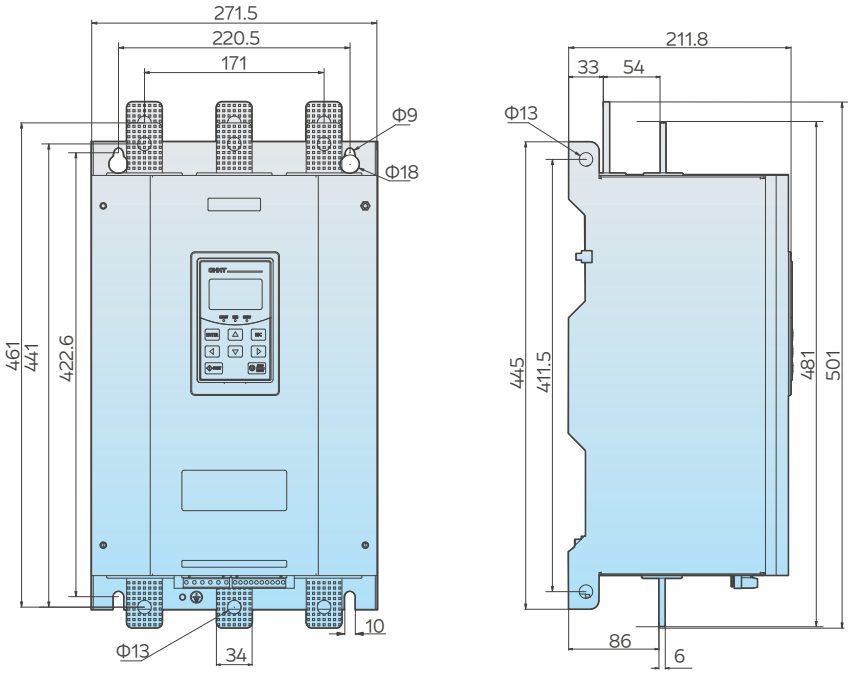

Figure 9.5 NJR5-500/D2~NJR5-630/D2, NJR5-500/D3~NJR5-630/D3, NJR5-500/D4~NJR5-630/D4,NJR5-500/D5~NJR5-630/D, NJR5-500/D6~NJR5-630/D6 overall appearance and installation dimensions diagram

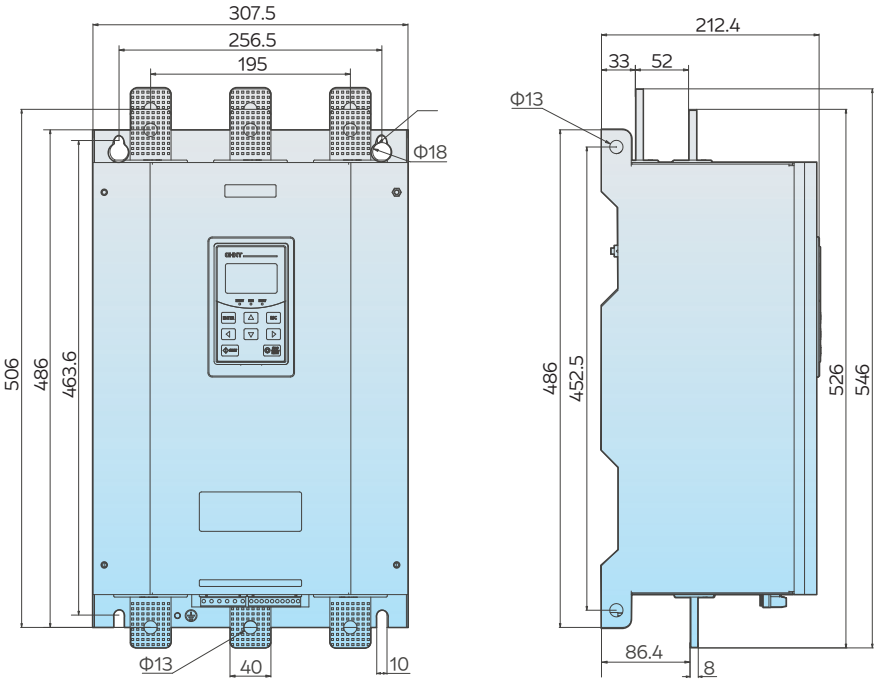

Figure 9.6 NJR5-710/D2~NJR5-800/D2, NJR5-710/D3~NJR5-800/D3, NJR5-710/D4~NJR5-800/D4,NJR5-710/D5~NJR5-800/D, NJR5-710/D6~NJR5-800/D6 overall appearance and installation dimensions diagram

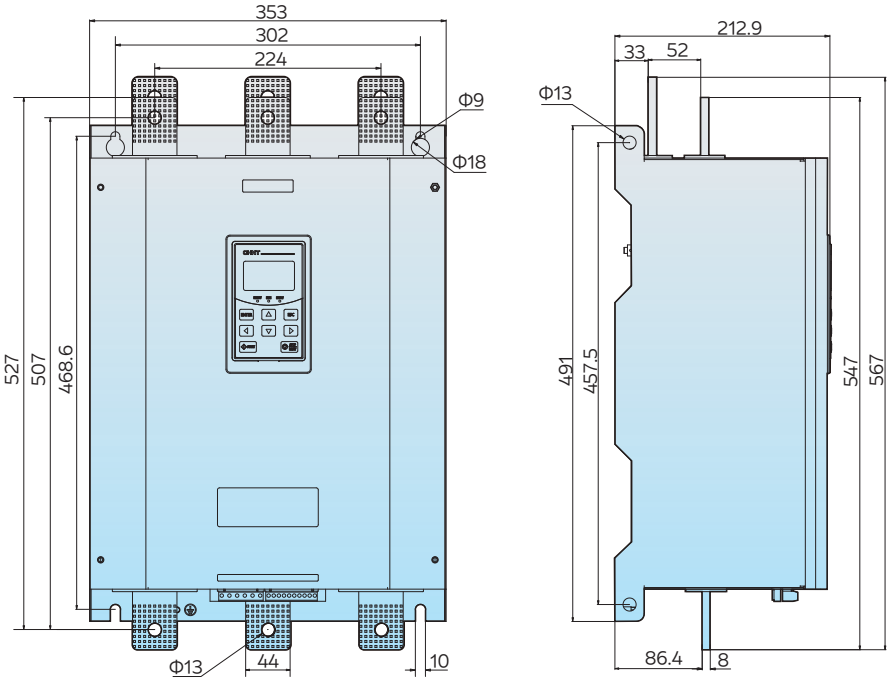

Figure 9.7 NJR5-900/D2~NJR5-1120/D2, NJR5-900/D3~NJR5-1120/D3, NJR5-900/D4~NJR5-1120/D4,NJR5-900/D5~NJR5-1120/D, NJR5-900/D6~NJR5-1120/D6 overall appearance and installation dimensions diagram

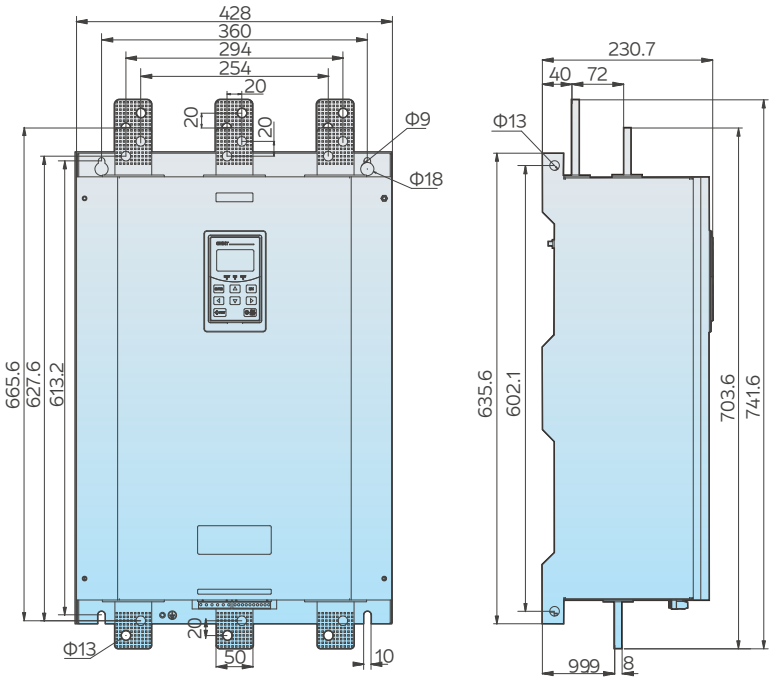

Figure 9.8 NJR5-1260/D2~NJR5-1600/D2, NJR5-1260/D3~NJR5-1600/D3, NJR5-1260/D4~NJR5-1600/D4, NJR5-1260/D5~NJR5-1600/D, NJR5-1260/D6~NJR5-1600/D6 overall appearance and installation dimensions diagram

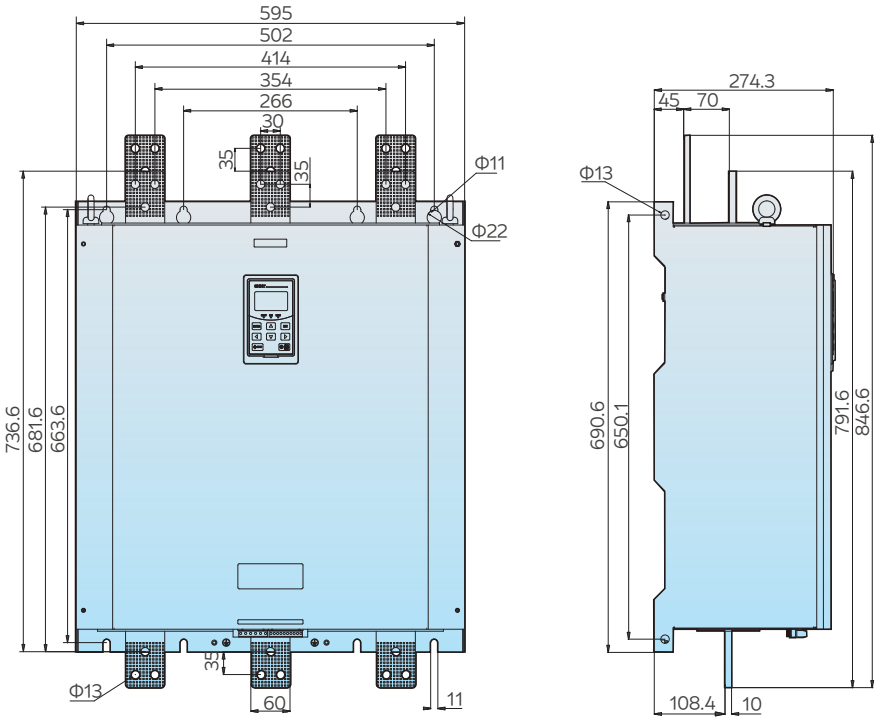

9.2 Soft starter weight

Table 9.1 Soft starter weight and main terminal tightening torque

Model	Net Weight	Gross Weight	Main terminal screw specifications	Main terminal tightening torque (N·m)	Remarks
NJR5-15/D2/D3	3.0kg	3.4kg	M6	4 ~ 6	Figure 9.1
NJR5-22/D2/D3					
NJR5-30/D2/D3					
NJR5-37/D2/D3					
NJR5-44/D2/D3	3.4kg	3.8kg			
NJR5-60/D2/D3					
NJR5-15/D4/D5/D6	3.2kg	3.6kg			
NJR5-22/D4/D5/D6					
NJR5-30/D4/D5/D6					
NJR5-37/D4/D5/D6					
NJR5-44/D4/D5/D6	3.5kg	3.9kg			
NJR5-60/D4/D5/D6					
NJR5-74/D2/D3	3.9kg	4.5kg	M6	4 ~ 6	Figure 9.2
NJR5-90/D2/D3	4.2kg	4.9kg			
NJR5-110/D2/D3					
NJR5-74/D4/D5/D6					
NJR5-90/D4/D5/D6	4.7kg	5.4kg			
NJR5-110/D4/D5/D6					
NJR5-150/D2/D3	8.6kg	9.5kg	M8	9.0 ~ 11	Figure 9.3
NJR5-180/D2/D3					
NJR5-150/D4/D5/D6					
NJR5-180/D4/D5/D6					
NJR5-220/D2/D3	19.0kg	20.1kg	M10	18 ~ 23	Figure 9.4
NJR5-264/D2/D3					
NJR5-320/D2/D3					
NJR5-370/D2/D3					
NJR5-440/D2/D3					
NJR5-220/D4/D5/D6					
NJR5-264/D4/D5/D6					
NJR5-320/D4/D5/D6					
NJR5-370/D4/D5/D6					
NJR5-440/D4/D5/D6					
NJR5-500/D2/D3	24.0kg	25.5kg	M10	18 ~ 23	Figure 9.5
NJR5-560/D2/D3					
NJR5-630/D2/D3					
NJR5-500/D4/D5/D6					
NJR5-560/D4/D5/D6					
NJR5-630/D4/D5/D6					
NJR5-710/D2/D3	28.0kg	38.5kg	M12	31.4 ~ 39.5	Figure 9.6
NJR5-800/D2/D3					
NJR5-710/D4/D5/D6					
NJR5-800/D4/D5/D6					
NJR5-900/D2/D3	52.1kg	68.0kg	M12	31.4 ~ 39.5	Figure 9.7
NJR5-1000/D2/D3					
NJR5-1120/D2/D3					
NJR5-900/D4/D5/D6					
NJR5-1000/D4/D5/D6					
NJR5-1120/D4/D5/D6					
NJR5-1260/D2/D3	82.2kg	102.0kg	M12	31.4 ~ 39.5	Figure 9.8
NJR5-1420/D2/D3					
NJR5-1600/D2/D3					
NJR5-1260/D4/D5/D6	83.4kg	103.9kg			
NJR5-1420/D4/D5/D6					
NJR5-1600/D4/D5/D6					

10. Ordering Information

10.1 When ordering, please select the required model and specification according to the description of the model and its meaning.
Example: The power level of the grid is AC380V, the power of the controlled motor is 45kW, and the rated current is 84A. It is necessary to use the soft starter together with the soft starter cabinet or power distribution cabinet.
The order model is: NJR5-90/D3
Example: The power level of the grid is AC690V, the power of the controlled motor is 90kw, and the rated current is 84A. It is necessary to use the soft starter together with the soft starter cabinet or power distribution cabinet.
The order model is: NJR5-90/D6

10.2 When using a soft starter for a motor with more than four poles, it is recommended to use a larger size.

10.3 When using a soft starter for a two-pole motor, due to the large starting current, please set the parameters correctly according to the instruction manual before using it.

10.4 For occasions with heavy loads, it is recommended to use a soft starter with a larger gear.

SAP No	Model	Typel	Power supply	Rated power kW	Ordering code
G710968900000163	NJR5-15/D2	External bypass type	3 phase 220V	4	639829
G710968900000164	NJR5-22/D2	External bypass type	3 phase 220V	5.5	639830
G710968900000165	NJR5-30/D2	External bypass type	3 phase 220V	7.5	639831
G710968900000166	NJR5-37/D2	External bypass type	3 phase 220V	11	639832
G710968900000167	NJR5-44/D2	External bypass type	3 phase 220V	11	639833
G710968900000168	NJR5-60/D2	External bypass type	3 phase 220V	15	639834
G710968900000169	NJR5-74/D2	External bypass type	3 phase 220V	18.5	639835
G710968900000170	NJR5-90/D2	External bypass type	3 phase 220V	22	639836
G710968900000171	NJR5-110/D2	External bypass type	3 phase 220V	30	639837
G710968900000172	NJR5-150/D2	External bypass type	3 phase 220V	37	639838
G710968900000173	NJR5-180/D2	External bypass type	3 phase 220V	45	639839
G710968900000174	NJR5-220/D2	External bypass type	3 phase 220V	55	639840
G710968900000175	NJR5-264/D2	External bypass type	3 phase 220V	75	639841
G710968900000176	NJR5-320/D2	External bypass type	3 phase 220V	90	639842
G710968900000177	NJR5-370/D2	External bypass type	3 phase 220V	110	639843
G710968900000178	NJR5-440/D2	External bypass type	3 phase 220V	110	639844
G710968900000179	NJR5-500/D2	External bypass type	3 phase 220V	132	639845
G710968900000180	NJR5-560/D2	External bypass type	3 phase 220V	160	639846
G710968900000181	NJR5-630/D2	External bypass type	3 phase 220V	160	639847
G710968900000182	NJR5-710/D2	External bypass type	3 phase 220V	200	639848
G710968900000183	NJR5-800/D2	External bypass type	3 phase 220V	200	639849
G710968900000184	NJR5-900/D2	External bypass type	3 phase 220V	250	639850
G710968900000185	NJR5-1000/D2	External bypass type	3 phase 220V	250	639851
G710968900000186	NJR5-1120/D2	External bypass type	3 phase 220V	280	639852
G710968900000187	NJR5-1260/D2	External bypass type	3 phase 220V	315	639853
G710968900000188	NJR5-1420/D2	External bypass type	3 phase 220V	355	639854
G710968900000189	NJR5-1600/D2	External bypass type	3 phase 220V	400	639855
G710968900000190	NJR5-15/D3	External bypass type	3 phase 380V	7.5	639856

Continued from previous table

SAP No	Model	Typel	Power supply	Rated power kW	Ordering code
G710968900000191	NJR5-22/D3	External bypass type	3 phase 380V	11	639857
G710968900000192	NJR5-30/D3	External bypass type	3 phase 380V	15	639858
G710968900000193	NJR5-37/D3	External bypass type	3 phase 380V	18.5	639859
G710968900000194	NJR5-44/D3	External bypass type	3 phase 380V	22	639860
G710968900000195	NJR5-60/D3	External bypass type	3 phase 380V	30	639861
G710968900000196	NJR5-74/D3	External bypass type	3 phase 380V	37	639862
G710968900000197	NJR5-90/D3	External bypass type	3 phase 380V	45	639863
G710968900000198	NJR5-110/D3	External bypass type	3 phase 380V	55	639864
G710968900000199	NJR5-150/D3	External bypass type	3 phase 380V	75	639865
G710968900000200	NJR5-180/D3	External bypass type	3 phase 380V	90	639866
G710968900000201	NJR5-220/D3	External bypass type	3 phase 380V	110	639867
G710968900000202	NJR5-264/D3	External bypass type	3 phase 380V	132	639868
G710968900000203	NJR5-320/D3	External bypass type	3 phase 380V	160	639869
G710968900000204	NJR5-370/D3	External bypass type	3 phase 380V	185	639870
G710968900000205	NJR5-440/D3	External bypass type	3 phase 380V	220	639871
G710968900000206	NJR5-500/D3	External bypass type	3 phase 380V	250	639872
G710968900000207	NJR5-560/D3	External bypass type	3 phase 380V	280	639873

SAP No	Model	Typel	Power supply	Rated power kW	Ordering code
G710968900000208	NJR5-630/D3	External bypass type	3 phase 380V	315	639874
G710968900000209	NJR5-710/D3	External bypass type	3 phase 380V	355	639875
G710968900000210	NJR5-800/D3	External bypass type	3 phase 380V	400	639876
G710968900000211	NJR5-900/D3	External bypass type	3 phase 380V	450	639877
G710968900000212	NJR5-1000/D3	External bypass type	3 phase 380V	500	639878
G710968900000213	NJR5-1120/D3	External bypass type	3 phase 380V	560	639879
G710968900000214	NJR5-1260/D3	External bypass type	3 phase 380V	630	639880
G710968900000215	NJR5-1420/D3	External bypass type	3 phase 380V	710	639881
G710968900000216	NJR5-1600/D3	External bypass type	3 phase 380V	800	639882
G710968900000217	NJR5-15/D4	External bypass type	3 phase 460V	9	639883
G710968900000218	NJR5-22/D4	External bypass type	3 phase 460V	15	639884
G710968900000219	NJR5-30/D4	External bypass type	3 phase 460V	18.5	639885
G710968900000220	NJR5-37/D4	External bypass type	3 phase 460V	22	639886
G710968900000221	NJR5-44/D4	External bypass type	3 phase 460V	30	639887
G710968900000222	NJR5-60/D4	External bypass type	3 phase 460V	37	639888
G710968900000223	NJR5-74/D4	External bypass type	3 phase 460V	45	639889
G710968900000224	NJR5-90/D4	External bypass type	3 phase 460V	55	639890
G710968900000225	NJR5-110/D4	External bypass type	3 phase 460V	75	639891
G710968900000226	NJR5-150/D4	External bypass type	3 phase 460V	90	639892
G710968900000227	NJR5-180/D4	External bypass type	3 phase 460V	110	639893
G710968900000228	NJR5-220/D4	External bypass type	3 phase 460V	132	639894
G710968900000229	NJR5-264/D4	External bypass type	3 phase 460V	150	639895
G710968900000230	NJR5-320/D4	External bypass type	3 phase 460V	185	639896
G710968900000231	NJR5-370/D4	External bypass type	3 phase 460V	220	639897
G710968900000232	NJR5-440/D4	External bypass type	3 phase 460V	250	639898
G710968900000233	NJR5-500/D4	External bypass type	3 phase 460V	280	639899
G710968900000234	NJR5-560/D4	External bypass type	3 phase 460V	315	639900
G710968900000235	NJR5-630/D4	External bypass type	3 phase 460V	355	639901
G710968900000236	NJR5-710/D4	External bypass type	3 phase 460V	400	639902
G710968900000237	NJR5-800/D4	External bypass type	3 phase 460V	450	639903
G710968900000238	NJR5-900/D4	External bypass type	3 phase 460V	560	639904
G710968900000239	NJR5-1000/D4	External bypass type	3 phase 460V	560	639905
G710968900000240	NJR5-1120/D4	External bypass type	3 phase 460V	630	639906
G710968900000241	NJR5-1260/D4	External bypass type	3 phase 460V	710	639907
G710968900000242	NJR5-1420/D4	External bypass type	3 phase 460V	800	639908
G710968900000243	NJR5-1600/D4	External bypass type	3 phase 460V	900	639909
G710968900000244	NJR5-15/D5	External bypass type	3 phase 575V	11	639910
G710968900000245	NJR5-22/D5	External bypass type	3 phase 575V	18.5	639911
G710968900000246	NJR5-30/D5	External bypass type	3 phase 575V	22	639912
G710968900000247	NJR5-37/D5	External bypass type	3 phase 575V	30	639913
G710968900000248	NJR5-44/D5	External bypass type	3 phase 575V	30	639914
G710968900000249	NJR5-60/D5	External bypass type	3 phase 575V	45	639915
G710968900000250	NJR5-74/D5	External bypass type	3 phase 575V	55	639916
G710968900000251	NJR5-90/D5	External bypass type	3 phase 575V	75	639917
G710968900000252	NJR5-110/D5	External bypass type	3 phase 575V	75	639918

SAP No	Model	Typel	Power supply	Rated power kW	Ordering code
G710968900000253	NJR5-150/D5	External bypass type	3 phase 575V	110	639919
G710968900000254	NJR5-180/D5	External bypass type	3 phase 575V	132	639920
G710968900000255	NJR5-220/D5	External bypass type	3 phase 575V	160	639921
G710968900000256	NJR5-264/D5	External bypass type	3 phase 575V	185	639922
G710968900000257	NJR5-320/D5	External bypass type	3 phase 575V	250	639923
G710968900000258	NJR5-370/D5	External bypass type	3 phase 575V	280	639924
G710968900000259	NJR5-440/D5	External bypass type	3 phase 575V	315	639925
G710968900000260	NJR5-500/D5	External bypass type	3 phase 575V	355	639926
G710968900000261	NJR5-560/D5	External bypass type	3 phase 575V	400	639927
G710968900000262	NJR5-630/D5	External bypass type	3 phase 575V	450	639928
G710968900000263	NJR5-710/D5	External bypass type	3 phase 575V	500	639929
G710968900000264	NJR5-800/D5	External bypass type	3 phase 575V	560	639930
G710968900000265	NJR5-900/D5	External bypass type	3 phase 575V	630	639931
G710968900000266	NJR5-1000/D5	External bypass type	3 phase 575V	800	639932
G710968900000267	NJR5-1120/D5	External bypass type	3 phase 575V	800	639933
G710968900000268	NJR5-1260/D5	External bypass type	3 phase 575V	900	639934
G710968900000269	NJR5-1420/D5	External bypass type	3 phase 575V	1000	639935
G710968900000270	NJR5-1600/D5	External bypass type	3 phase 575V	1200	639936
G710968900000271	NJR5-15/D6	External bypass type	3 phase 690V	11	639937
G710968900000272	NJR5-22/D6	External bypass type	3 phase 690V	18.5	639938
G710968900000273	NJR5-30/D6	External bypass type	3 phase 690V	22	639939
G710968900000274	NJR5-37/D6	External bypass type	3 phase 690V	30	639940
G710968900000275	NJR5-44/D6	External bypass type	3 phase 690V	37	639941
G710968900000276	NJR5-60/D6	External bypass type	3 phase 690V	55	639942
G710968900000277	NJR5-74/D6	External bypass type	3 phase 690V	75	640001
G710968900000278	NJR5-90/D6	External bypass type	3 phase 690V	90	640120
G710968900000279	NJR5-110/D6	External bypass type	3 phase 690V	110	640121
G710968900000280	NJR5-150/D6	External bypass type	3 phase 690V	132	640122
G710968900000281	NJR5-180/D6	External bypass type	3 phase 690V	160	640123
G710968900000282	NJR5-220/D6	External bypass type	3 phase 690V	200	640124
G710968900000283	NJR5-264/D6	External bypass type	3 phase 690V	250	640125
G710968900000284	NJR5-320/D6	External bypass type	3 phase 690V	315	640126
G710968900000285	NJR5-370/D6	External bypass type	3 phase 690V	355	640127
G710968900000286	NJR5-440/D6	External bypass type	3 phase 690V	400	640128
G710968900000287	NJR5-500/D6	External bypass type	3 phase 690V	400	640129
G710968900000288	NJR5-560/D6	External bypass type	3 phase 690V	500	640130
G710968900000289	NJR5-630/D6	External bypass type	3 phase 690V	560	640131
G710968900000290	NJR5-710/D6	External bypass type	3 phase 690V	630	640132
G710968900000291	NJR5-800/D6	External bypass type	3 phase 690V	710	640133
G710968900000292	NJR5-900/D6	External bypass type	3 phase 690V	800	640134
G710968900000293	NJR5-1000/D6	External bypass type	3 phase 690V	900	640135
G710968900000294	NJR5-1120/D6	External bypass type	3 phase 690V	900	640136
G710968900000295	NJR5-1260/D6	External bypass type	3 phase 690V	1000	640137
G710968900000296	NJR5-1420/D6	External bypass type	3 phase 690V	1200	640138
G710968900000297	NJR5-1600/D6	External bypass type	3 phase 690V	1400	640139